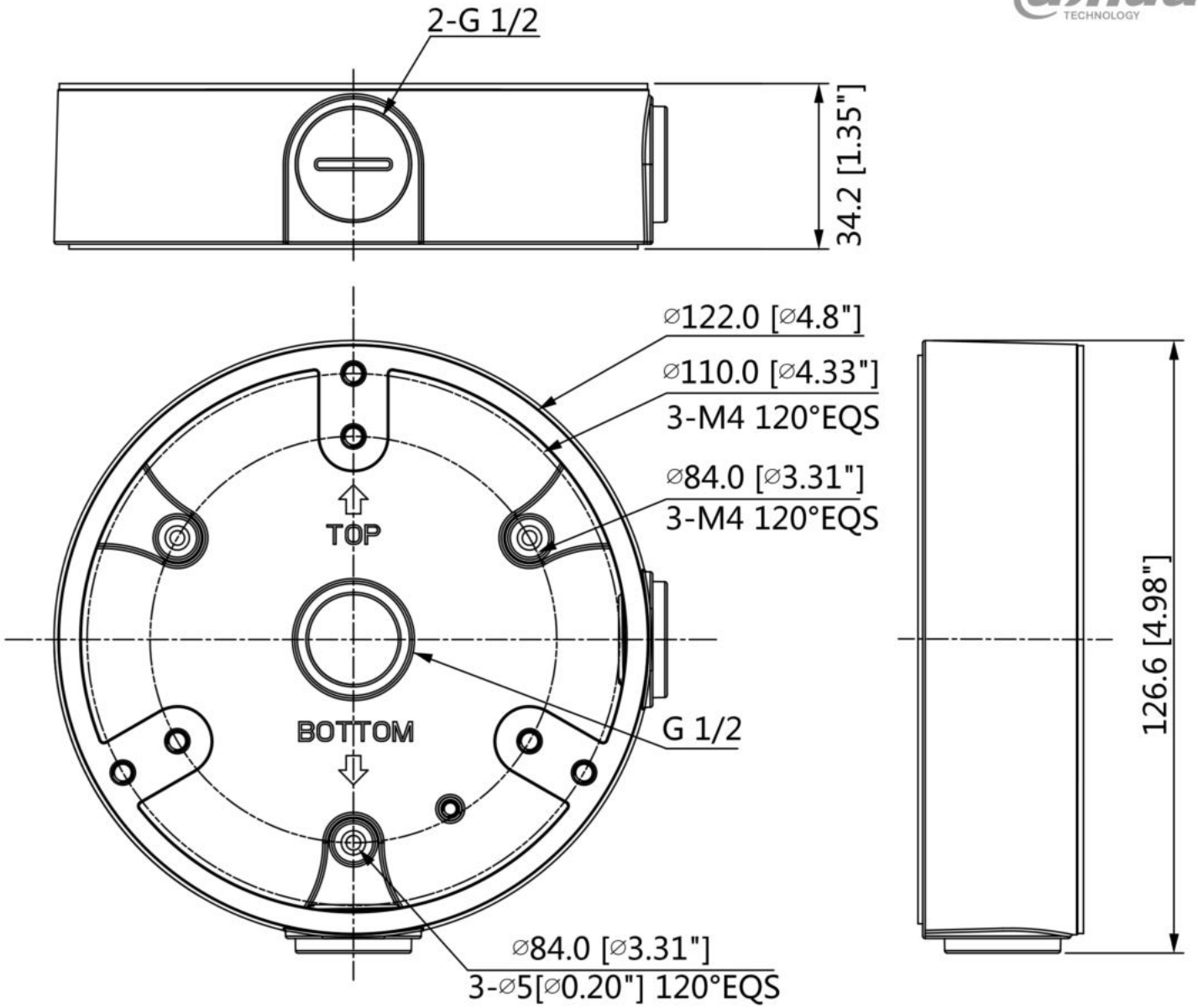DH-PFA137 dimension: